Mechanical properties of solids

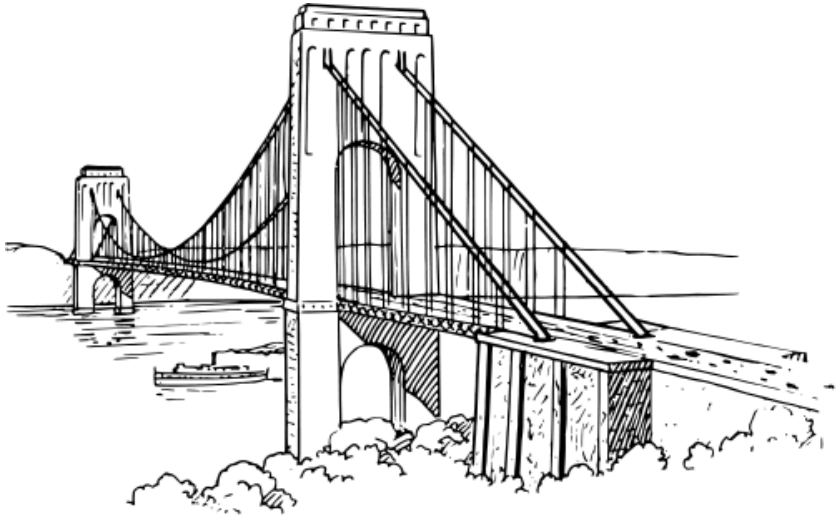

Note : This PPT will NOT help you learn physics concepts. It is intended only as a quick revision of formulas, definitions, theorems and concepts before examinations. No physics can be learnt just by watching a few videos or going through a few slides of PPT.

V Vijaykiran
M.Sc., B.Ed., NET
SIGMA Physics Resource Centre
http://www.sigmaprc.in

Mechanical properties of solids

Determination of Young's modulus

Behaviour of wire under increasing load

Strain energy per unit volume

Measurement of Young's modulus

- Both the wires are of identical dimensions.
- Both the wires are given an initial load that helps to keep the wires straight.
- The reference wire is connected to mm scale.
- The experimental wire is connected to vernier
- Weights are gradually added to the experimental wire and its elongation is measured using the vernier.
- Let L be the initial length of the wire and r be its radius
- Let m be the mass that results in an elongation of ΔL

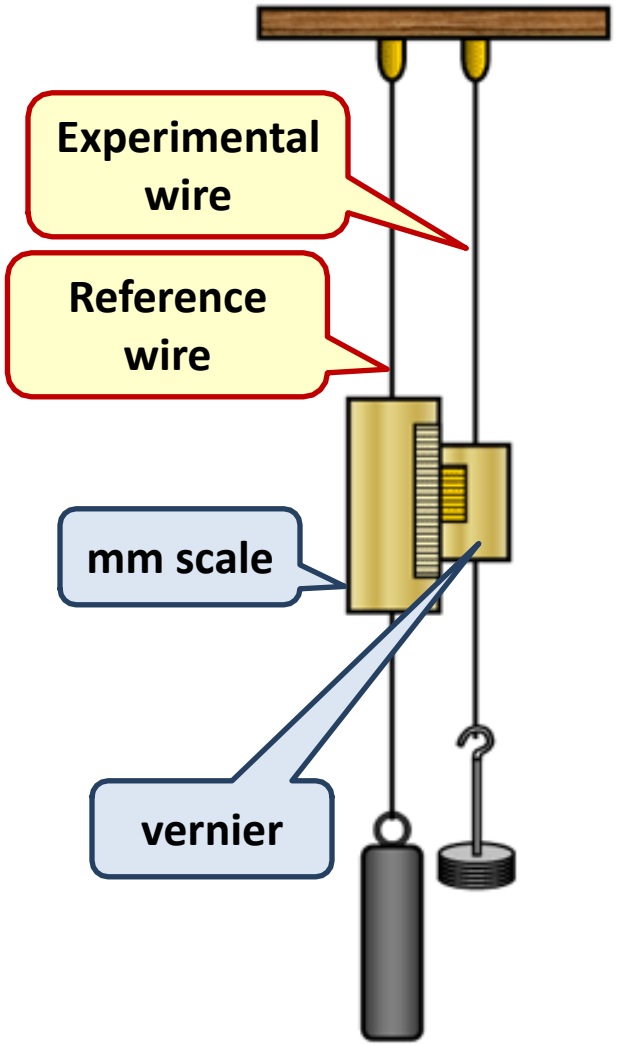

Young's modulus is given by the relation

$$Y = \frac{mg}{\pi r^2} \times \frac{L}{\Delta L}$$

Behaviour of a wire under increasing load

A wire is suspended from a rigid support. Free end of the wire is attached to a weight hanger. Load on wire is increased/decreased by changing the weights. A graph is plotted for stress as a function of strain.

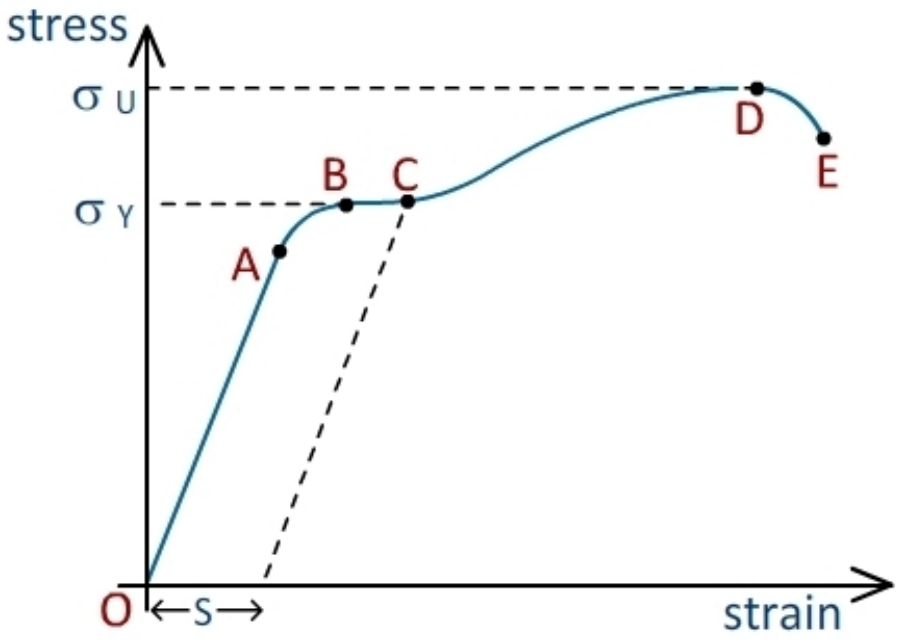

Stress - strain curve for a metal

- Proportional limit (A): In this region stress is proportional to strain and Hooke's law is obeyed.
- Yield point or elastic limit (B) : The limit up to which the body retains elasticity. The corresponding stress is called yield strength.

Behaviour of a wire under increasing load

- Permanent set: Beyond yield point, certain amount of deformation is present in the wire even after deforming force is removed. This is called permanent set.
- Ultimate tensile strength (D) : Beyond this point, additional strain is produced even by a reduced load.
- If the ultimate strength and fracture points D and E are close, the material is said to be brittle. If they are far apart, the material is said to be ductile.

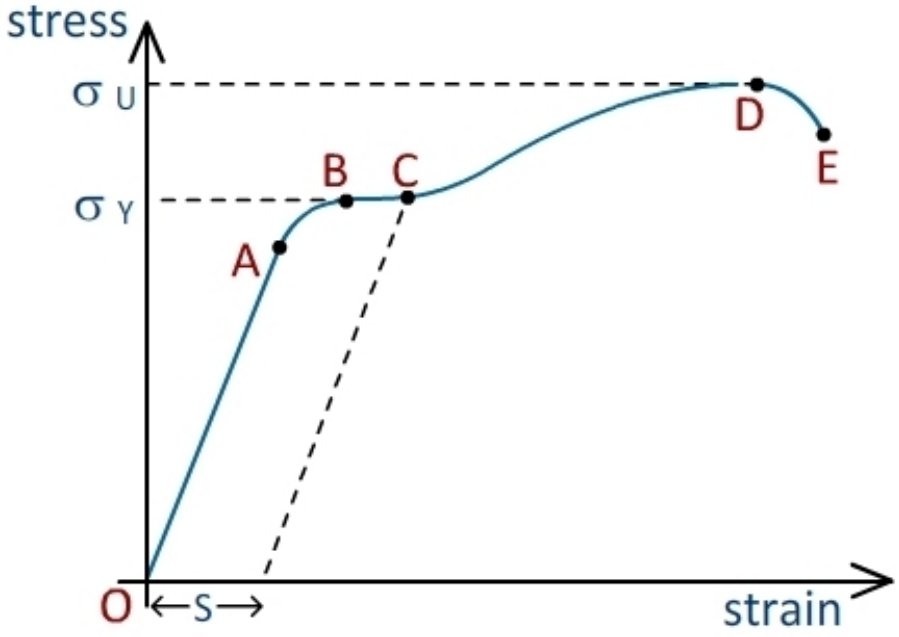

Stress - strain curve for a metal

Strain energy per unit volume

Consider a wire of initial length l, subjected to a deforming force resulting in an e in it.

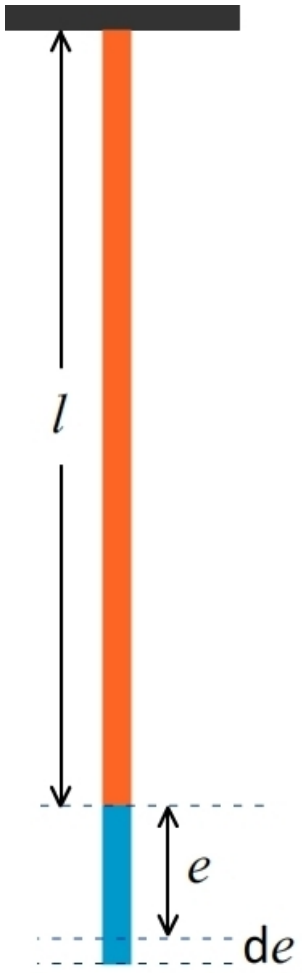

Work done (dW) in causing a further small extension (de) of the wire is

$$dW = F\,de \qquad \text{i}$$

From Hooke's law we get

$$Y = \frac{F}{A}\frac{l}{e}$$

$$F = \frac{YAe}{l} \qquad \text{ii}$$

Substituting (ii) in equation (i)

$$dW = \frac{YAe}{l}de$$

Integrating the above expression

$$W = \frac{YA}{l}\int_0^e e^1\,de$$

$$W = \frac{YA}{l}\left[\frac{e^2}{2}\right]$$

This work is stored as elastic potential energy in the wire. Energy per unit volume is given by

$$\frac{U}{V} = \frac{YA}{l}\left[\frac{e^2}{2}\right]\times\frac{1}{Al}$$

$$\frac{U}{V} = \frac{1}{2}Y\frac{e^2}{l^2}$$

$$\frac{U}{V} = \frac{1}{2}\text{ stress} \times \text{strain}$$

Applications

Steel is preferred to copper, brass, aluminum in heavy-duty machines and in structural designs.

Steel is preferred because it has a higher Young's modulus. This implies that steel is more elastic and can therefore develop larger stress for the same amount of strain. This makes steel more capable of bearing heavy loads and resisting deformation under external load.

Aluminum is lighter and has corrosion resistance. However, its lesser elasticity does not make it ideal for critical load-bearing structures and machinery parts.

Two identical solid balls, one of ivory and the other of wet clay are dropped from the same height on to the floor. Which one will rise to a greater height after striking the floor

We know that ivory ball is more elastic than wet-clay ball. Therefore, the ivory ball will tend to regain its original shape in a very short time after the collision. Due to it, there will be large energy and momentum transfer to the ivory ball in comparison to the wet-clay ball. As a result of it, the ivory ball will raise higher after the collision.

Applications

Pillars with distributed or flat ends are preferred over pillars with rounded ends in building and bridge construction

Pillars with distributed or flat ends are preferred over pillars with rounded ends in building and bridge construction because distributed ends provide better load transfer and support stability. A pillar with flat or distributed ends has a larger surface area in contact with the foundation or the structure it supports, which helps to evenly distribute the load transmitted by the pillar. This reduces the chances of stress concentration at the ends and minimizes the risk of structural failure.

Explain why the maximum height of a mountain on earth is approximately 10 km?

The maximum height of a mountain on Earth is approximately 10 km because of the elastic limit and strength of the rocks forming the mountain. The rocks at the base of the mountain develop stress due to the weight of the mountain above them. When this stress exceeds the elastic limit or critical shearing stress of the rocks, the rock material begins to *flow* or deform, preventing the mountain from growing taller.

sigmaprc@gmail.com
sigmaprc.in

